NO	M O D E L	KNOB(L)
1	1177	1.5 mm
2	1177A	2.0 mm

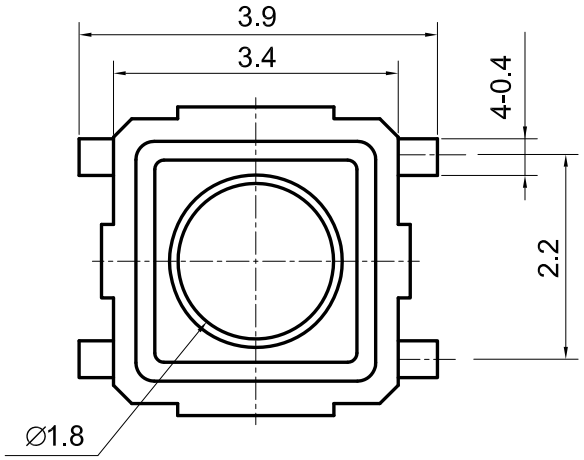

CIRCUIT DIAGRAM

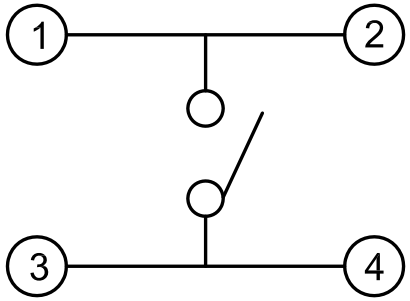

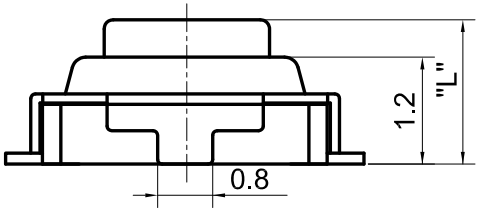

SMD REFLOW PATTERN
(TOLERANCE : ±0.05)

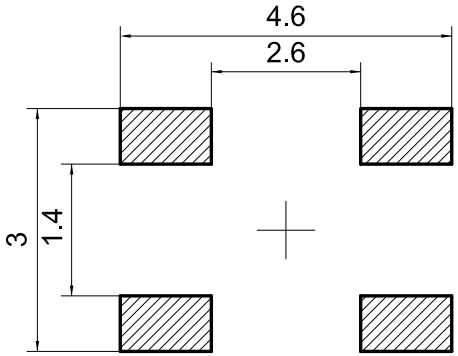

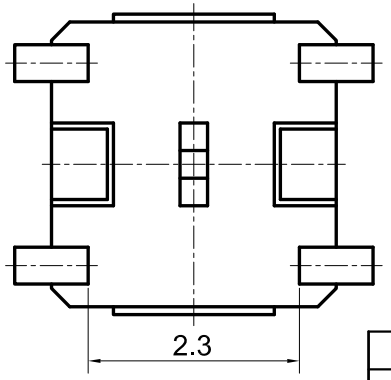

SPECIFICATION

1. RATING : DC 12V / 50mA MAX.
2. CIRCUIT : 1C - 1P
3. OPERATING FORCE : 160 ± 50gf
4. CONTACT RESISTANCE : 100mΩ MAX.
5. TRAVEL : 0.2 ± 0.1mm
6. OPERATING LIFE : 100000 CYCLES MAX.
7. TOLERANCE : ± 0.2mm

		GENERAL TORANCE (UNLESS SPECIFIED) ±0.3	SCALE 12 / 1	UNIT METRIC	TITLE	1177 (WITH STEM) SERIES
			THIRD ANGLE PROJECTION	SIZE A4	DOCUMENT NUMBER	
		DRAWN BY	CHECKED BY	APPROVED BY	SUNGSAN ENTERPRISE.,LTD.	
REV	DESCRIPTION				THIS DRAWING CONTAINS INFORMATION THAT IS PROPRIET TO CREATIVE ELECTRONICS CO.,LTD. AND SHOULD NOT BE USED WITHOUT WRITTEN PERMISSION.	